talemagroup

EMI Noise Suppression •
Data and Signal Line Filters •
Common Mode Interface Chokes •

SECTION 6

Current Compensated EMI Noise Suppression Chokes

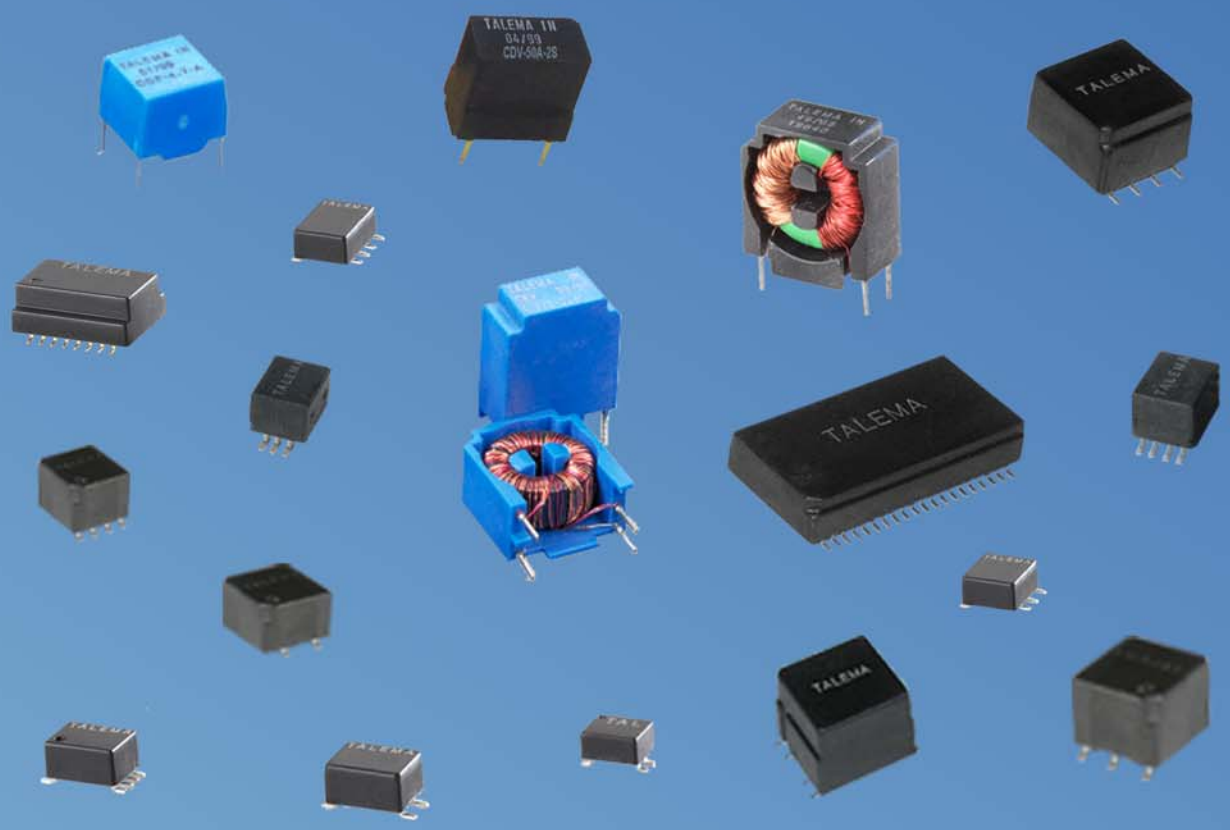

TALEMA PROFILE

Founded in 1975, The TALEMA International Group has established itself as a world leader in the Design & Manufacture of toroidal transformers and related magnetic components. Our strong technical engineering expertise has contributed to the growth of our current workforce to over 800 employees in manufacturing locations in the Czech Republic and India.

Over the years The Talema Group has succeeded in designing, producing and delivering in excess of 50 million transformers to its customers. The recent incorporation of xDSL technology into our extensive range of Telecom and LAN magnetics offerings, such as ISDN, Ethernet transformers for 10/100/1000Base-T, has broadened our market offering to an even higher level.

QUALITY

The TALEMA Group has a total commitment to quality and employs Lean Six Sigma training for engineering, production and administrative staff to help achieve a goal of zero defects. All facilities maintain very stringent Quality Control and Quality Assurance procedures and are certified to and manufacture in accordance with ISO 9001:2015 (India) and ISO 9001:2016 (Czech Republic) and meet a broad range of International Standards including UL, VDE, IEC and EN.

ENVIRONMENT

All TALEMA International Group manufacturing facilities are RoHS & REACH Compliant and all chokes, inductors and HF Components are produced in an Environment Management System (EMS) facility certified to ISO 14001:2015 (India) and ISO 14001:2016 (Czech Republic).

RoHS REACH

DIL and SMD Common Mode Interface Chokes

Series	Inductance Range	Number of Lines	Mounting Style	No. Contacts & Pitch	Max. Board Area W x L x Ht (mm)	Data Sheet Page Nr.
CTJ-2-XXX CTJ-2-XXX-S	11µH - 4.7mH 11µH - 51µH	2 2	"J" Lead SMD	4 x 1.27	5.0 x 3.3 x 3.3	3 - 3
CLJ-2-XXX CLJ-2-XXX-S	5µH - 47mH 6µH - 51µH	2 2	"J" Lead SMD	4 x 2.54	8.9 x 5.4 x 4.8	4 - 5
CMJ-2-XXX CMJ-4-XXX	5µH - 47mH 5µH - 12mH	2 4	"J" Lead SMD	4 x 2.54 8 x 1.27	9.0 x 5.8 x 5.3	6 - 7
CCJ-2-XXX CCJ-4-XXX	26µH - 70mH 26µH - 58mH	2 4	"J" Lead SMD	4 x 7.62 8 x 2.54	14.0 x 11.0 x 9.0	8 - 9
CDJ-XXX CQJ-XXX	1.0mH - 70mH 1.0mH - 90mH	2 4	"J" Lead SMD	4 x 10.16 8 x 2.54	16.6 x 13.2 x 11.7	10 - 11
CDF-XXX CDV-XXX	1.0mH - 70mH	2 2	Flat - THT Vertical - THT	4 x 10.16	14.0 x 12.5 x 11.0 9.0 x 14.0 x 14.5	
CQF-XXX CQV-XXX	1.0mH - 90mH	4 4	Flat - THT Vertical - THT	8 x 2.54	14.0 x 12.5 x 11.0 9.0 x 14.0 x 14.5	
CKV-XXX Data Line CKV-XXX-S Power Line	120µH - 68mH 4.7mH - 47mH	2 2	Vertical - THT	4 x 2.54/5.08	7.4 x 15.2 x 17.6	12 13
CUJ-XXX-16E CUJ-XXX-16C CUJ-XXX-16D CUJ-XXX-16A CUJ-XXX-16B	24µH - 4.7mH	4 6 6 8 8	"J" Lead SMD	16 x 1.27	9.6 x 12.8 x 6.0	14 - 15
SMD Data and Signal Line Filters		2 to 16	"J" Lead SMD	Various		16 - 18
Tape & Reel Packaging and Dimensions						19 - 20
Regional Locations - Design, Manufacturing, Sales & Marketing						21
TALEMA Product Summary (Total Proram)						22

Visit our website for detailed electrical and mechanical specifications for Talema's extensive line of magnetic components for Toroidal Tranformers, Power Conversion, Telecom & LAN Applications:

www.talema.com

talemagroup

CTJ-2 Series • Miniature SMD Common Mode Double Chokes

Features

- Miniature, low cost SMD for pick and place compatability while providing consistent and reliable coplanarity
- Extended Operating Temperature Range: -40° to +125°C
- Other inductance values and special types for operation at 150°C ambient are available upon request
- High attenuation over a wide frequency range - CAN bus types to 500MHz
- Available in Bifilar and Sector winding (Suffix SE)
- Materials: UL94-VO
- Manufactured in an ISO 9001:2015 and ISO 14001:2015 certified Talema facility
- Fully RoHS & REACH Compliant and meets lead free reflow level J-STD-020F

Electrical Specifications @ 25°C

Nominal Voltage: 42Vac (50/60Hz), 80Vdc
Operating Temperature: -40° to +125°C
Storage Temperature: -40° to +125°C
Climatic category: according to IEC68-1 40/125/56
Test voltage between windings: 500 Vrms

Test frequency:
Nominal Inductance: measured @ 100KHz/20mV
Leakage Inductance: measured @ 100KHz/100mV

Part Number	L_N (µH)	I_N (mA)	R_{CU} (mOhms)	V_T (Vrms)	Number of Data Lines
Sector Winding for CAN bus and similiar applications					
CTJ-2-110SE	11	250	160	500	2
CTJ-2-220SE	22	250	195	500	2
CTJ-2-330SE	33	200	260	500	2
CTJ-2-510SE	51	200	300	500	2
Bifilar Winding for Data and Signal Lines					
CTJ-2-110	11	300	160	500	2
CTJ-2-101	100	300	180	500	2
CTJ-2-221	220	200	250	500	2
CTJ-2-471	470	200	380	500	2
CTJ-2-102	1000	150	660	500	2
CTJ-2-222	2200	150	840	500	2
CTJ-2-332	3300	150	1500	500	2
CTJ-2-472	4700	150	1800	500	2

Dimensions

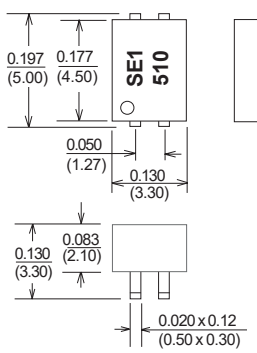

Suggested Pad Layout

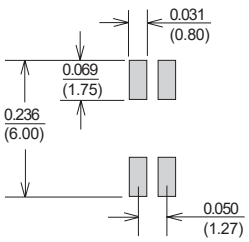

Bifilar (BE) Winding

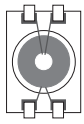

Sector (SE) Winding

Schematic

Dimensions: Inches (Millimeters)
Tolerance: ±0.010 (0.25) unless specified otherwise
Surface Coplanarity will be 0.004(0.10) maximum

Packing Method: Tape and Reel; Qty/Reel: 2000 Pcs

See following page for typical impedance curves

CLJ-2 / CMJ-2 Series • Miniature SMD Common Mode Double Chokes

Features

- Miniature, low cost SMD for pick and place compatability while providing consistent and reliable coplanarity
- Other inductance values, higher current ratings and special types for operation at 150°C ambient are available upon request
- High attenuation over a wide frequency range - CAN bus types to 500MHz
- Available in Bifilar and Sector (Suffix S) winding
- Materials: UL94-VO
- Manufactured in an ISO 9001:2015 and ISO 14001:2015 certified Talema facility
- Fully RoHS & REACH Compliant and meets lead free reflow level J-STD-020F

Electrical Specifications @ 25°C

Nominal Voltage: 42Vac (50/60Hz), 80Vdc
Operating Temperature: -25° to +85°C
Storage Temperature: -40° to +125°C
Climatic category: according to IEC68-1 25/85/56

Test frequency:

Nominal Inductance < 20mH, measured @ 100KHz/20mV
Nominal Inductance > 20mH, measured @ 10KHz/100mV
Leakage Inductance: measured @ 100KHz/100mV
Test Voltage between windings: 500Vrms

Part Number	OCL (µH) +50/-30%	I_N (mA)	L_L (µH)	R_{CU} (mOhms)	Number of Data Lines	Number of Data Lines
Sector Winding for CAN bus and similiar applications						
CLJ/CMJ-2-060S	6	2500	0.40	80	2	2
CLJ/CMJ-2-250S	25	800	0.95	110	2	2
CLJ/CMJ-2-510S	51	800	2.00	160	2	2
Bifilar Winding for Data and Signal Lines						
CLJ/CMJ-2-050	5	1200	0.05	60	2	2
CLJ/CMJ-2-110	11	500	0.05	80	2	2
CLJ/CMJ-2-240	24	500	0.10	100	2	2
CLJ/CMJ-2-250	25	500	0.10	110	2	2
CLJ/CMJ-2-470	47	500	0.20	130	2	2
CLJ/CMJ-2-510	51	500	0.10	148	2	2
CLJ/CMJ-2-101	100	500	0.25	315	2	2
CLJ/CMJ-2-471	470	500	0.10	290	2	2
CLJ/CMJ-2-102	1000	500	0.16	275	2	2
CLJ/CMJ-2-222	2200	400	0.15	345	2	2
CLJ/CMJ-2-472	4700	200	0.19	940	2	2
CLJ/CMJ-2-103	10000	200	0.36	1400	2	2
CLJ/CMJ-2-203	20000	140	1.00	1800	2	2
CLJ/CMJ-2-473	47000	100	1.00	3900	2	2

Dimensions

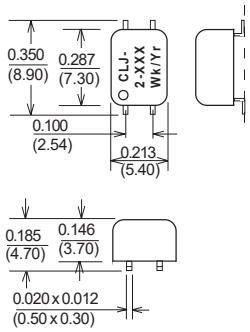

Suggested Pad Layout

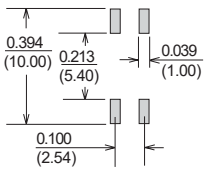

Bifilar Winding

Sector (CLJ-2-XXXS) Winding

Schematic

Dimensions: Inches (Millimeters)
Tolerance: ±0.010 (0.25) unless specified otherwise
Surface Coplanarity will be 0.004 (0.10) maximum

See following page for typical impedance curves

Packing Method: Tape and Reel; Qty/Reel: 1000 Pcs

Impedance Performance - CMJ / CLJ-2 Series

Double Chokes with Bifilar Winding

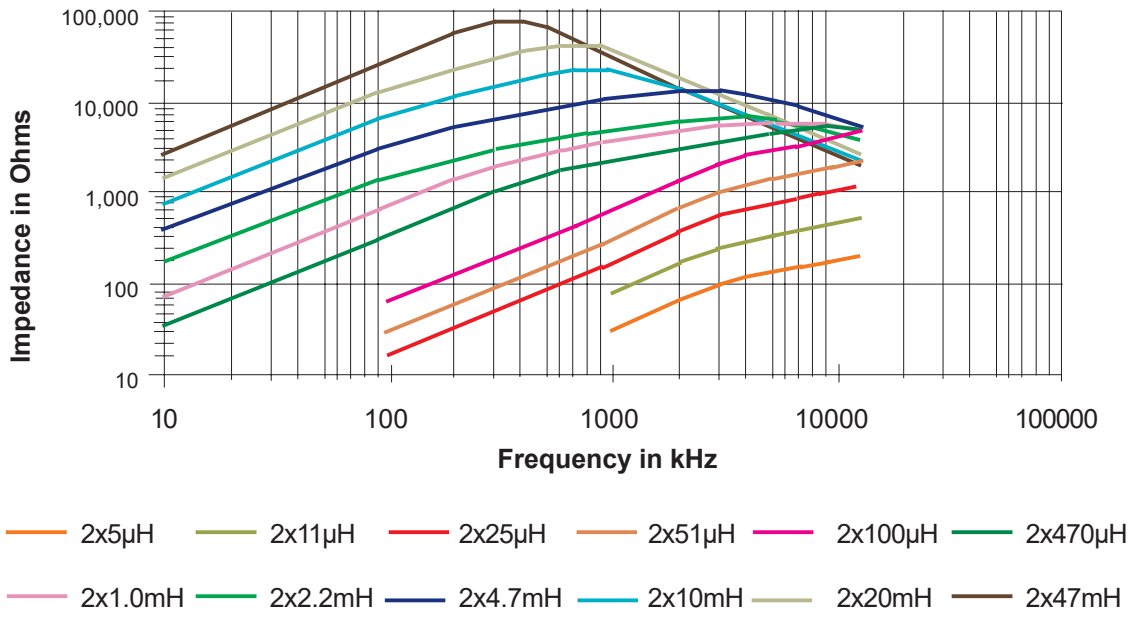

talemagroup

CLJ / CMJ Series • Miniature SMD Miniature Common Mode Chokes

Features

- Miniature, low cost SMD for pick and place compatability while providing consistent and reliable coplanarity
- Other inductance values and special types for operation at 150°C ambient are available upon request
- High attenuation over a wide frequency range - CAN bus types to 500MHz
- Available in Bifilar and Sector winding (Suffix S)
- Materials: UL94-VO
- Manufactured in an ISO 9001:2015 and ISO 14001:2015 certified Talema facility
- Fully RoHS & REACH Compliant and meets lead free reflow level J-STD-020F

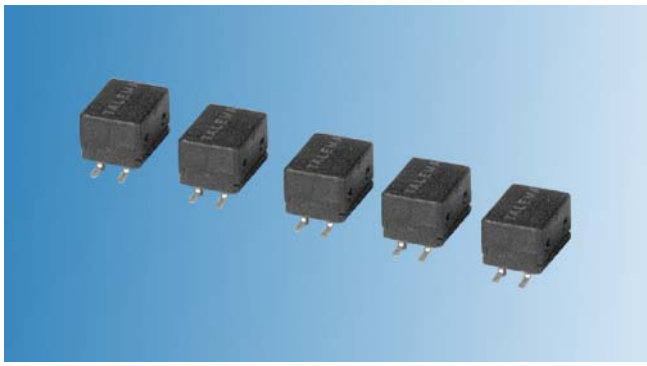

Electrical Specifications @ 25°C

Nominal Voltage: 42Vac (50/60Hz), 80Vdc
Operating Temperature: -25° to +85°C
Storage Temperature: -40° to +125°C
Climatic category: according to IEC68-1 25/85/56
Test voltage between windings: 500 Vrms

Test Voltage between Windings: 500Vrms
Test Frequency: Inductance measured @ 100KHz/20mV

CLJ / CMJ Series - Micro Miniature Common Mode Chokes for Data & Signal Line EMI Suppression						
Part Number	**OCL (µH) +50/-30%**	**I_N (mA)**	**L_L (µH)**	**R_{CU} (mOhms)**	**Number of Data Lines**	**Schematic**
Double Chokes						
CLJ/CMJ-2-050	5	1200	0.05	60	2	2
CLJ/CMJ-2-110	11	500	0.05	80	2	2
CLJ/CMJ-2-240	24	500	0.10	100	2	2
CLJ/CMJ-2-250	25	500	0.10	110	2	2
CLJ/CMJ-2-470	47	500	0.20	130	2	2
CLJ/CMJ-2-510	51	500	0.10	148	2	2
CLJ/CMJ-2-101	100	500	0.25	315	2	2
CLJ/CMJ-2-471	470	500	0.20	290	2	2
CLJ/CMJ-2-102	1000	500	0.25	275	2	2
CLJ/CMJ-2-222	2200	400	0.15	345	2	2
CLJ/CMJ-2-472	4700	200	0.30	940	2	2
CLJ/CMJ-2-103	10000	200	0.40	1400	2	2
CLJ/CMJ-2-203	20000	140	1.00	1800	2	2
CLJCMJ-2-473	47000	100	1.00	3900	2	2
Quad Chokes						
CLJ/CMJ-4-240	24	500	0.20	100	4	4
CLJ/CMJ-4-470	47	500	0.25	200	4	4
CLJ/CMJ-4-101	100	500	0.30	380	4	4
CLJ/CMJ-4-471	470	500	0.25	280	4	4
CLJ/CMJ-4-102	1000	500	0.35	320	4	4
CLJ/CMJ-4-222	2200	400	0.50	570	4	4
CLJ/CMJ-4-472	4700	300	0.70	940	4	4
CLJ/ CMJ-4-103	10000	110	0.50	1700	4	4
CLJ/CMJ-4-123	12000	130	1.00	2100	4	4

See following page for Dimensional details & Schematic

CLJ / CMJ -2

Dimensions

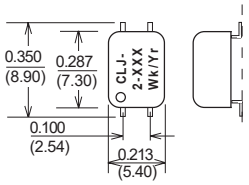

Suggested Pad Layout

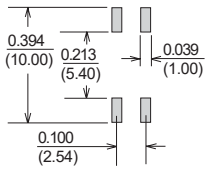

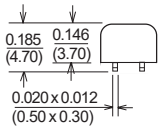

Schematic - 2

CLJ / CMJ -4

Dimensions

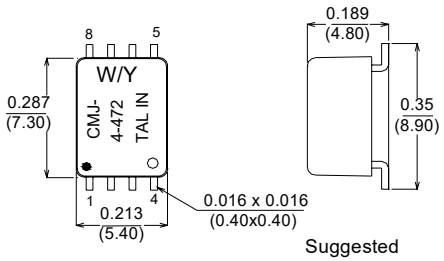

Schematic - 4

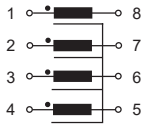

Suggested Pad Layout

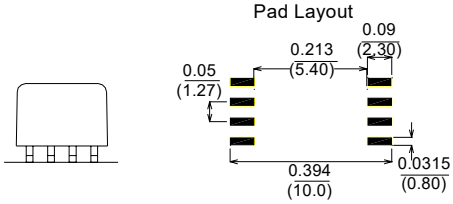

Dimensions: Inches (Millimeters)
Tolerance: ±0.010 (0.25) unless specified otherwise
Surface Coplanarity will be 0.004(0.10) maximum

Packing Method: Tape and Reel; Qty/Reel: 1000 Pcs

Impedance Performance
CMJ-4 Series Quad Chokes

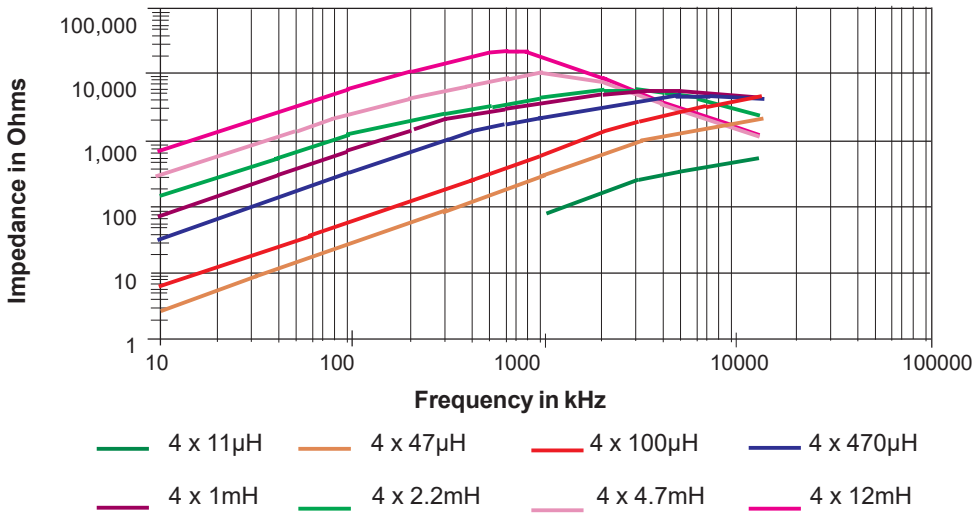

talemagroup

CCJ Series • Common Mode Interface Chokes for Data and Signal Lines

Features

- Low cost, compact SMD for pick and place compatability while providing consistent and reliable coplanarity
- High attenuation over a wide frequency range
- Manufactured in an ISO 9001:2015 ISO 14001:2015 certified Talema facility
- Other inductance values available upon request
- Fully RoHS & REACH Compliant and meets lead free reflow level J-STD-020F

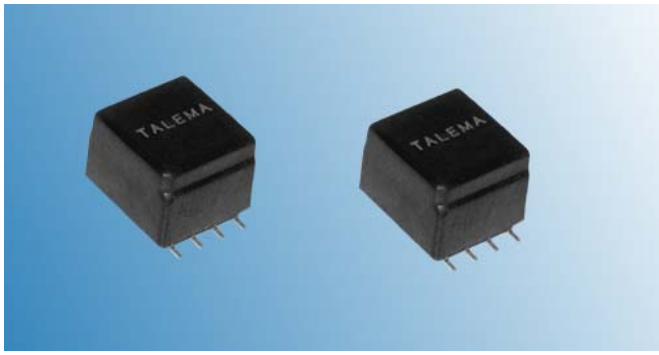

Electrical Specifications

Ratings @ 25°C ambient
Operating Temperature: -25° to +70°C
Storage Temperature: -25° to +105°C
Test Voltage between windings: 500Vrms
Test frequency measured @ 100KHz/20mV

Part Number	Number of Data Lines	OCL (µH ±30%)	I_N (mA)	DCR (mOhms) Typ.	Number of Coils	Windings per Core	Schematic
Double Chokes							
CCJ-2-260	2	26	900	55	1	2	A
CCJ-2-102	2	1000	550	140	1	2	A
CCJ-2-152	2	1500	550	100	1	2	A
CCJ-2-222	2	2200	550	115	1	2	A
CCJ-2-332	2	3300	550	140	1	2	A
CCJ-2-502	2	5000	500	180	1	2	A
CCJ-2-682	2	6800	450	300	1	2	A
CCJ-2-103	2	10000	400	250	1	2	A
CCJ-2-123	2	12000	400	270	1	2	A
CCJ-2-283	2	28000	270	520	1	2	A
CCJ-2-503	2	50000	200	970	1	2	A
CCJ-2-703	2	70000	170	1490	1	2	A
Quad Chokes • 4 windings per core							
CCJ-4-260	4	26	600	65	1	4	B
CCJ-4-470	4	47	500	100	1	4	B
CCJ-4-101	4	100	400	130	1	4	B
CCJ-4-221	4	220	400	190	1	4	B
CCJ-4-471	4	470	400	130	1	4	B
CCJ-4-681	4	680	400	140	1	4	B
CCJ-4-102	4	1000	350	190	1	4	B
CCJ-4-152	4	1500	350	120	1	4	B
CCJ-4-222	4	2200	350	140	1	4	B
CCJ-4-332	4	3300	350	180	1	4	B
CCJ-4-502	4	5000	330	230	1	4	B
CCJ-4-103	4	10000	230	430	1	4	B
CCJ-4-123	4	12000	170	790	1	4	B
CCJ-4-583	4	58000	90	2350	1	4	B

See following page for Dimesions, Schematics & Typical Impedance curves

Dimensions

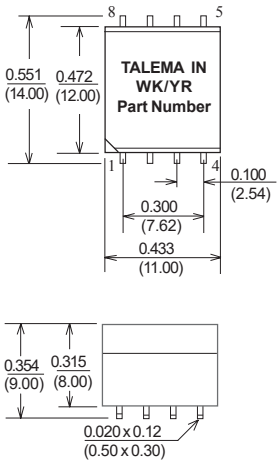

Suggested Pad Layout

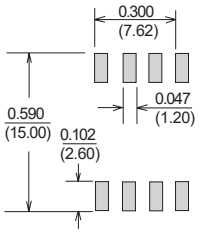

Schematics

Dimensions: Inches (Millimeters)
Tolerance: ±0.010 (0.25) unless specified otherwise
Surface Coplanarity will be 0.004 (0.10) maximum

Packing Method: Tape and Reel; Qty/Reel: 375 Pcs

Impedance Performance - CCJ-2 Series Double Chokes

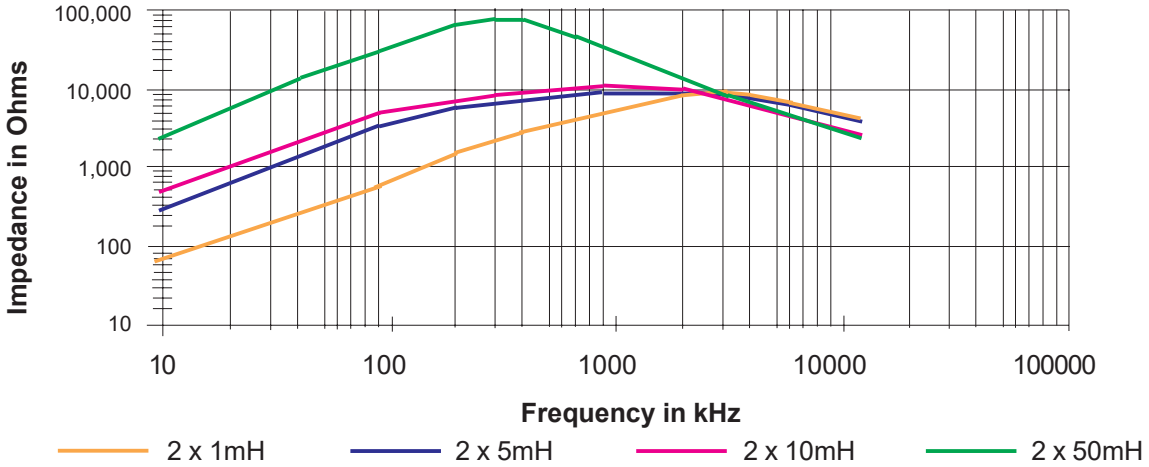

Impedance Performance - CCJ-4 Series Quad Chokes

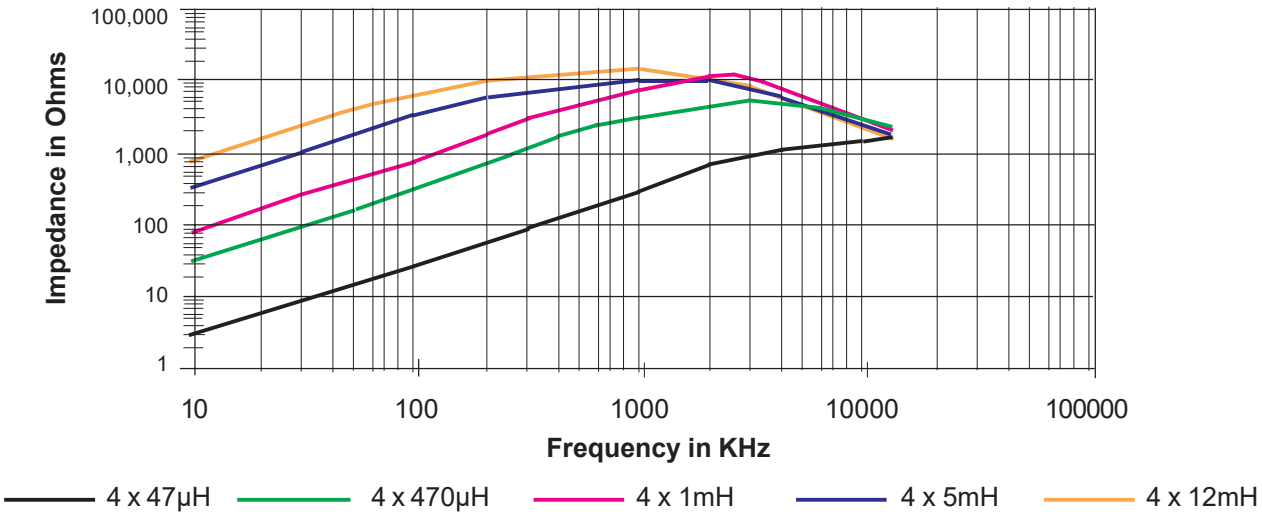

talemagroup

CD & CQ Series • Common Mode Interface Chokes for Data and Signal Lines

Features

- High attenuation over a wide frequency range
- Low interwinding and coupling capacitance
- Wide inductance range
- Excellent quality at extremely competitive price due to high volume production
- Manufactured in an ISO 9001:2015 and ISO 14001:2015 certified Talema facility
- Other inductance values available upon request
- Fully RoHS & REACH Compliant and SMD Components meet lead free reflow level J-STD-020F for SMD

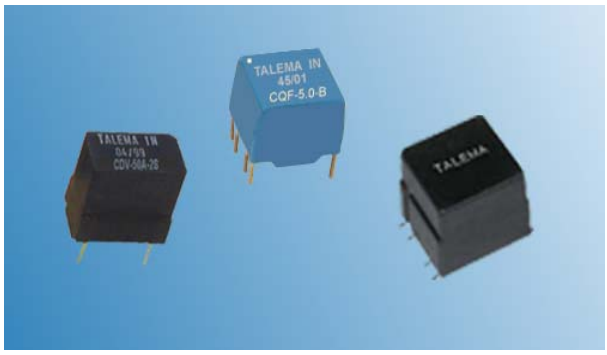

Electrical Specifications @ 25°C

Nominal Voltage: 42Vac (50/60Hz), 80Vdc
Operating Temperature: -25° to +85°C
Storage Temperature: -40° to +125°C
Climatic category: according to IEC68-1 25/85/56
Test voltage between windings: 500 Vrms

Test frequency:

Nominal Inductance:Measured @ 10KHz/100mVrms
Leakage Inductance:Measured @ 100KHz/100mVrms

Part Number	L_N (µH) ±30%	I_N (mA)	L_L (µH)	R_{CU} (mOhms)	V_P (Vrms)	Windings per Core	Package	Schematic
CD Series - Double Chokes for EMI noise suppression								
CD__-1.0-A	1000	600	0.25	190	500	2	F/ V / J	A
CD__-1.7-A	1700	550	0.42	200	500	2	F/ V / J	A
CD__-2.2-A	2200	350	0.45	300	500	2	F/ V / J	A
CD__-3.3-A	3300	350	0.50	370	500	2	F/ V / J	A
CD__-4.7-A	4700	350	0.40	600	500	2	F/ V / J	A
CD__-6.8-A	6800	350	0.55	510	500	2	F/ V / J	A
CD__-10-A	10000	350	0.65	620	500	2	F/ V / J	A
CD__-12-A	12000	300	0.70	680	500	2	F/ V / J	A
CD__-15-A	15000	300	0.55	720	500	2	F/ V / J	A
CD__-22-A	22000	300	0.85	920	500	2	F/ V / J	A
CD__-28-A	28000	300	0.95	1020	500	2	F/ V / J	A
CD__-33-A	33000	300	1.90	1120	500	2	F/ V / J	A
CD__-50-A	50000	300	1.35	1800	500	2	F/ V / J	A
CD__-70-A	70000	300	2.50	2100	500	2	F/ V / J	A
CQ Series - Quad Chokes for EMI noise suppression								
CQ__-1.0-B	1000	400	0.20	200	500	4	F/ V / J	B
CQ__-1.7-B	1700	350	0.40	260	500	4	F/ V / J	B
CQ__-2.2-B	2200	300	0.45	310	500	4	F/ V / J	B
CQ__-3.3-B	3300	300	0.50	380	500	4	F/ V / J	B
CQ__-5.0-B	5000	300	0.30	430	500	4	F/ V / J	B
CQ__-6.8-B	6800	300	0.55	850	500	4	F/ V / J	B
CQ__-10-B	10000	300	0.65	1060	500	4	F/ V / J	B
CQ__-12-B	12000	250	0.65	1120	500	4	F/ V / J	B
CQ__-58-B	58000	200	1.40	2400	500	4	F/ V / J	B
CQ__-90-B	90000	150	2.00	4150	500	4	F/ V / J	B

When ordering Series CD or CQ, use suffix "F", "V" or "J" to designate desired package style.
CDF/CQF = Flat package, through-hole;
CDV/CQV = Vertical package, through hole;
CDJ/CQJ = Flat package, surface mount device
See following page for dimensions, schematics and typical impedence curves

Packaging Style and Impedance Performance

Package Style

CDF / CQF

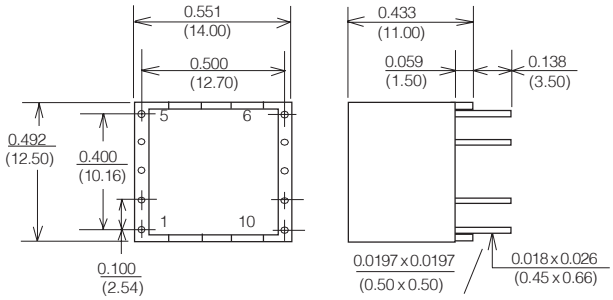

CDV / CQV

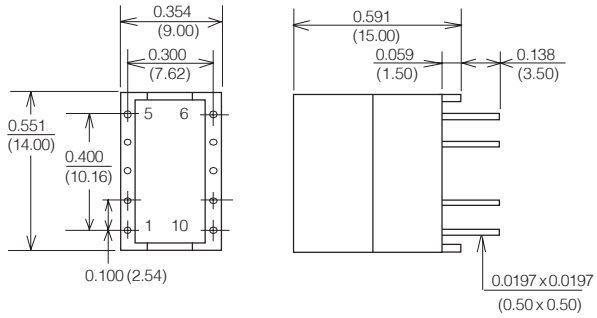

CDJ / CQJ

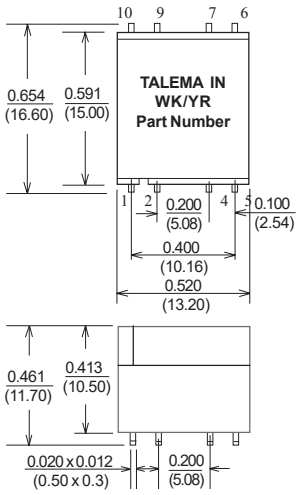

Suggested Pad Layout

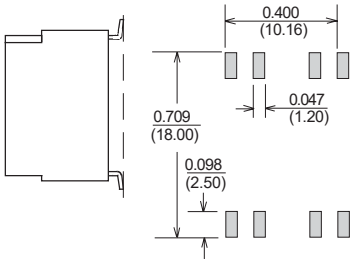

Schematics

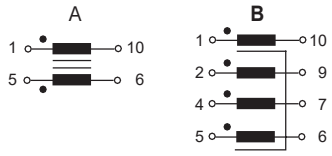

Dimensions: Inches (Millimeters)
Tolerance: ±0.010 (0.25) unless specified otherwise
Surface Coplanarity will be 0.004(0.10) maximum

Packing Method for SMD: Tape and Reel; Qty/Reel: 200Pcs

Note: Parts will be supplied with only the pins shown on Schematic A (types CDF, CDV, & CDJ) and Schematic B (types CQF, CQV & CQJ)

Impedance Performance - CQx & CDx Series Double Chokes

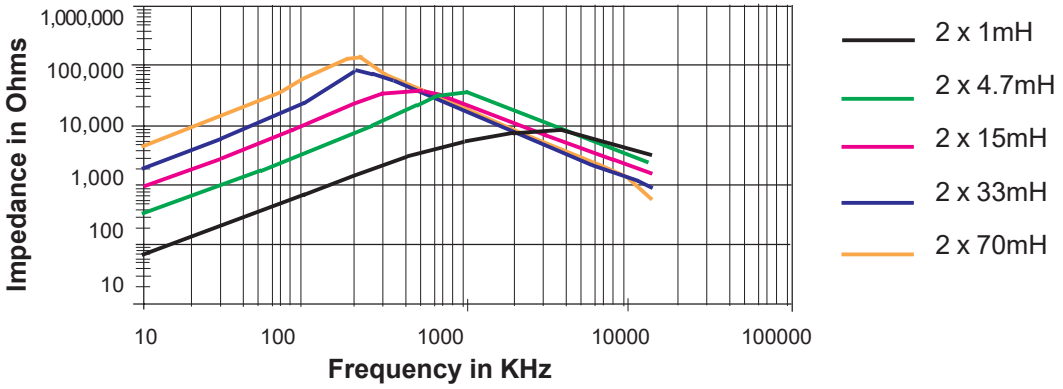

CQx & CDx Series Quad Chokes

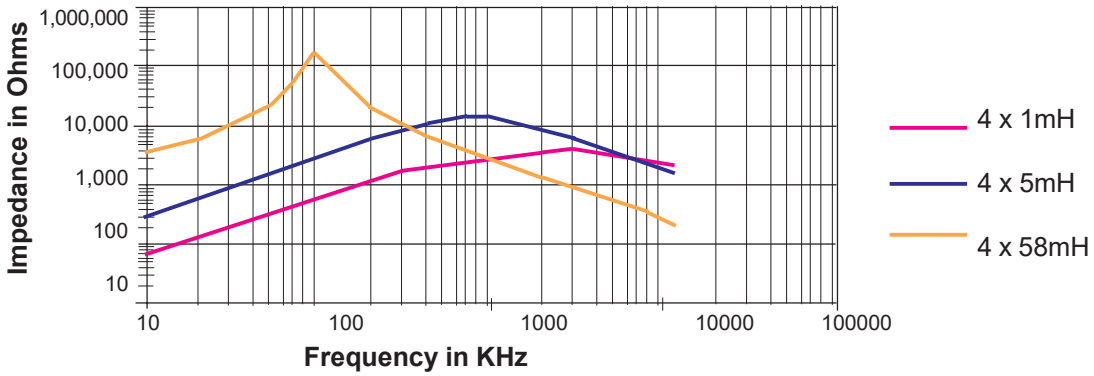

CKV Series • Common Mode Interface Chokes for Data and Signal Lines

Features

- High attenuation over a wide frequency range
- Low interwinding and coupling capacitance
- Wide inductance range
- Manufactured in an ISO 9001:2015 and ISO 14001:2015 certified Talema facility
- Other inductance values available upon request
- Fully RoHS & REACH Compliant

Electrical Specifications @ 25°C

Nominal Voltage: 42Vac (50/60Hz), 80Vdc
Operating Temperature: -25° to +85°C
Storage Temperature: -40° to +125°C
Climatic category: according to IEC68-1 25/85/56
Test voltage between windings: 500 Vrms

Test frequency

Nominal Inductance: measured @ 10KHz/100mVrms
Leakage Inductance: measured @ 100KHz/100mVrms

CKV Series - Double Chokes for EMI noise suppression

Part Number	L_N (µH) ±30%	I_N (mA)	L_L (µH)	R_{CU} (mOhms)	V_P (Vrms)	Windings per Core	Schematic
CKV-0.12	120	100	0.35	180	500	2	A
CKV-4.7	4700	100	1.00	900	500	2	A
CKV-10	10000	100	1.50	1300	500	2	A
CKV-16	16000	100	2.00	1700	500	2	A
CKV-38	38000	100	3.00	2800	500	2	A
CKV-68	68000	100	2.30	4630	500	2	A

Dimensions

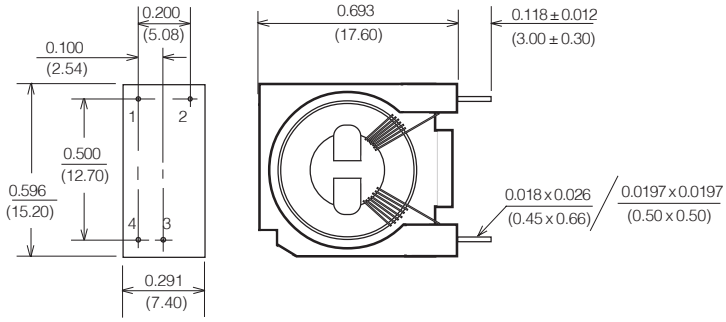

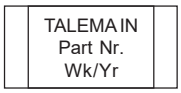

Dimensions: Inches (Millimeters)
Tolerance: ±0.010 (0.25)
unless specified otherwise

Schematic

A

Impedance Performance - Bifilar Winding

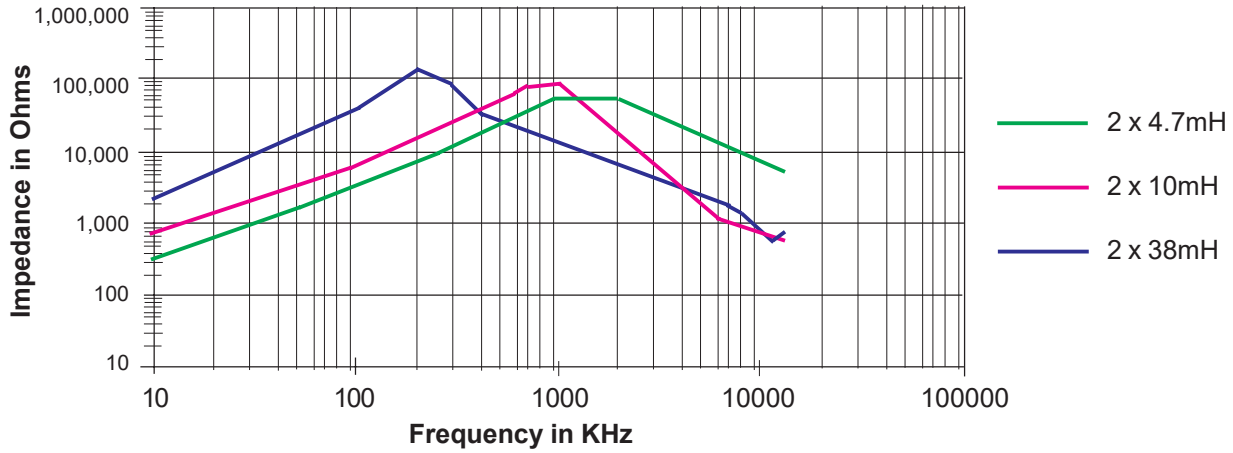

talemagroup

CKV Series • Current Compensated Double Chokes for Power Lines

Features

- High attenuation over a wide frequency range
- Low interwinding and coupling capacitance
- Sector Winding
- Manufactured in an ISO 9001:2015 and ISO 14001:2015 certified Talema facility
- Flame retardant case per UL94V-O
- Other inductance values available upon request
- Fully RoHS & REACH Compliant

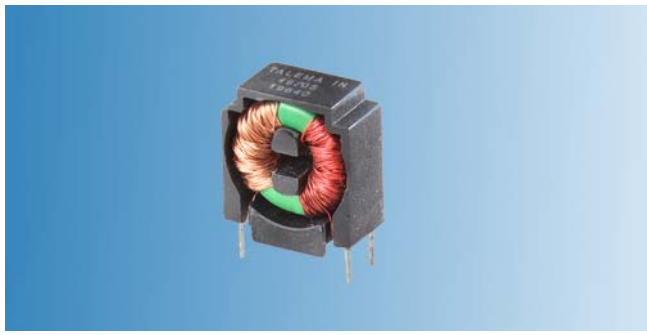

Electrical Specifications @ 25°C

Rated Voltage: 250Vac
Rated current @ 50/60Hz and 40°C ambient
Operating Temperature: -40° to +85°C
Storage Temperature: -40° to +125°C
Climatic category: according to IEC68-1 40/85/56

RoHS REACH

CKV Series - Current Compensated Double Chokes for Power Lines

Part Number	L_N (µH) -30/+50%	I_N (mA)	L_L (µH)	R_{CU} (mOhms)	V_P (Vrms)	Windings per Core	Schematic
CKV-4.7-S	4700	700	70	440	1500	2	A or B
CKV-6.8-S	6800	600	100	630	1500	2	A or B
CKV-10-S	10000	500	150	1000	1500	2	A or B
CKV-15-S	15000	400	225	1350	1500	2	A or B
CKV-30-S	30000	300	400	2200	1500	2	A or B
CKV-47-S	47000	250	750	2400	1500	2	A or B

Dimensions

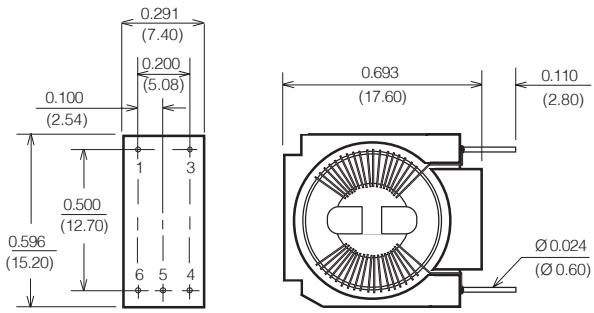

TALEMA IN
Part Nr.
Wk/Yr

Dimensions: Inches (Millimeters)
Tolerance: ±0.010 (0.25) unless specified otherwise

Schematic

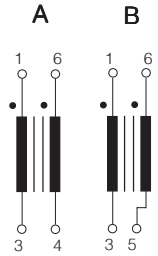

Note: Normal pinning will be 1-3, 6-4 Schematic A
If pinning 1-3, 6-5 is required, Pls see Schematic B
Should be specified when ordering.

Impedance Performance - Sector Winding

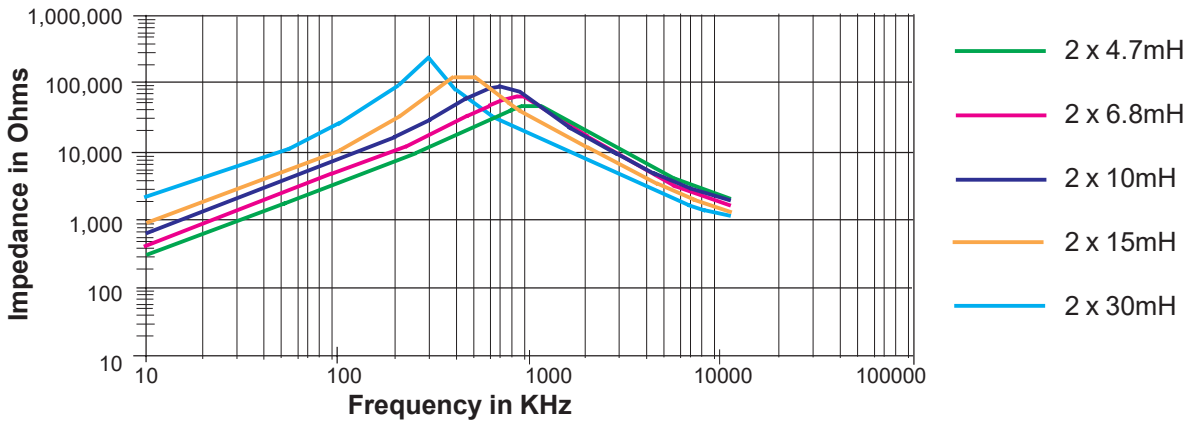

talemagroup

CUJ-16 • Miniature Chip Style SMD Common Mode Filter Chokes

Features

- EMI noise suppression for data and signal line filtering
- Low cost SMD common mode chokes are designed for pick and place compatability while providing consistent and reliable coplanarity
- High attenuation over a wide frequency range
- Manufactured in an ISO 9001:2015 and ISO 14001:2015 certified Talema facility
- Fully RoHS & REACH Compliant and meets lead free reflow level J-STD-020F

Electrical Specifications @ 25°C

Nominal Voltage: 42Vac (50/60Hz), 80Vdc
Operating Temperature: -25° to +85°C
Storage Temperature: -40° to +125°C
Climatic category: according to IEC68-1 25/85/56
Test voltage between windings: 500 Vrms

Test frequency:

Nominal Inductance: measured @ 100KHz/20mV
Leakage Inductance: measured @ 100KHz/100mV

Common Mode Chokes for Data and Signal Line EMI Noise Suppression

Part Number	Number of Data Lines	OCL (µH) ±30%	I_N (mA)	DCR (mOhms)	Number of Coils	Windings per Coil	Schematic
CUJ-240-16E	4	24	800	45	2	2	E
CUJ-340-16E	4	34	700	55	2	2	E
CUJ-101-16E	4	100	450	135	2	2	E
CUJ-471-16E	4	470	450	95	2	2	E
CUJ-102-16E	4	1000	450	135	2	2	E
CUJ-472-16E	4	4700	300	310	2	2	E
CUJ-240-16C	6	24	650	45	2	3	C
CUJ-470-16C	6	47	450	90	2	3	C
CUJ-101-16C	6	100	350	170	2	3	C
CUJ-471-16C	6	470	350	95	2	3	C
CUJ-102-16C	6	1000	330	170	2	3	C
CUJ-472-16C	6	4700	200	430	2	3	C
CUJ-240-16D	6	24	600	75	3	2	D
CUJ-470-16D	6	47	500	110	3	2	D
CUJ-680-16D	6	68	450	135	3	2	D
CUJ-471-16D	6	470	350	220	3	2	D
CUJ-102-16D	6	1000	350	220	3	2	D
CUJ-472-16D	6	4700	190	750	3	2	D
CUJ-240-16A	8	24	550	45	2	4	A
CUJ-470-16A	8	47	400	90	2	4	A
CUJ-101-16A	8	100	250	240	2	4	A
CUJ-471-16A	8	470	250	95	2	4	A
CUJ-102-16A	8	1000	250	240	2	4	A
CUJ-472-16A	8	4700	160	600	2	4	A
CUJ-240-16B	8	24	430	130	4	2	B
CUJ-470-16B	8	47	360	180	4	2	B
CUJ-101-16B	8	100	300	260	4	2	B
CUJ-471-16B	8	470	300	180	4	2	B
CUJ-102-16B	8	1000	300	240	4	2	B
CUJ-472-16B	8	4700	160	1180	4	2	B

Dimensions and Impedance Curves on following page

CUJ-XXX-16

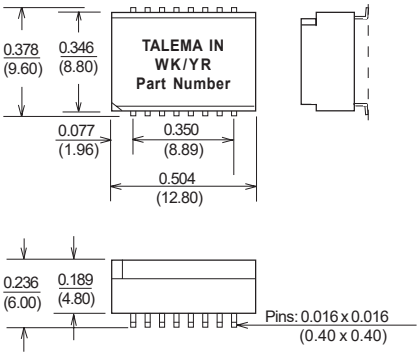

Suggested Pad Layout

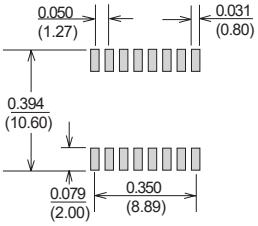

Schematics

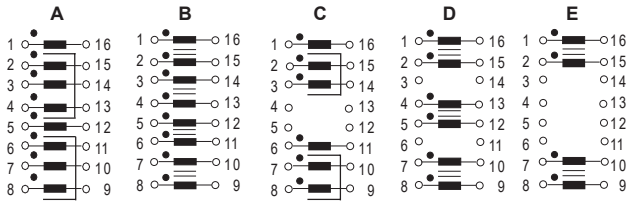

Dimensions: Inches (Millimeters)
Tolerance: ±0.010 (0.25) unless otherwise specified
Surface Coplanarity will be 0.004(0.10) maximum

Packing Method: Tape and Reel; Qty/Reel: 600 Pcs

Impedance Performance
CUJ-XXX-16A Series Quadfilar Winding

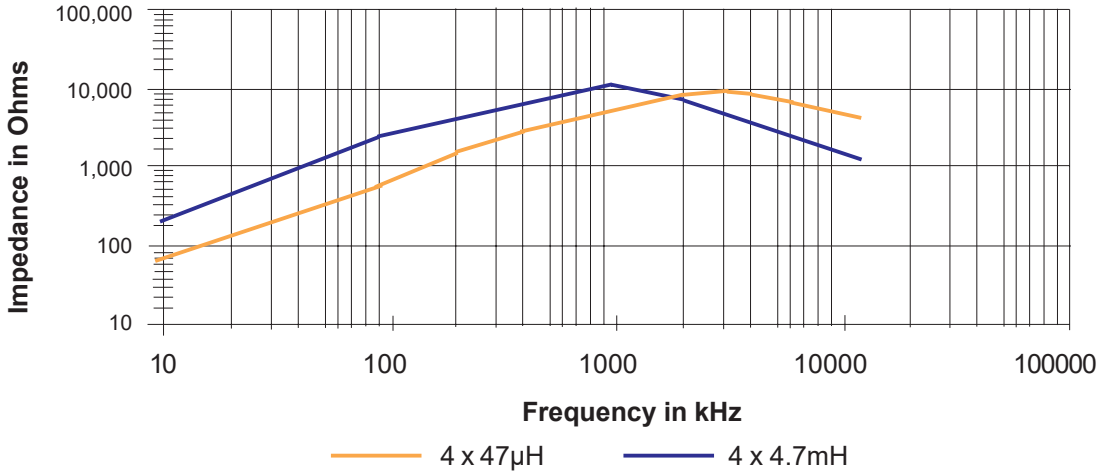

Impedance Performance
CUJ-XXX-16B Series Bifilar Winding

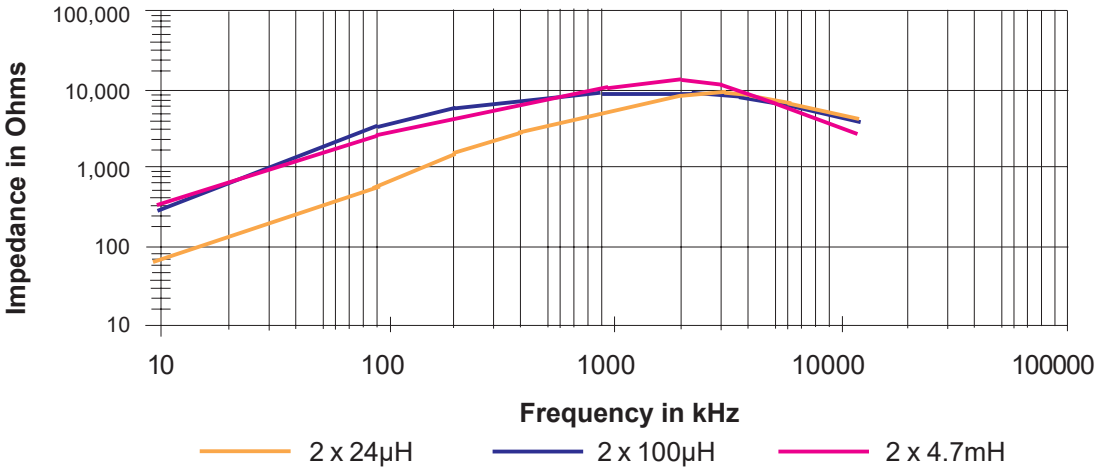

talemagroup

Common Mode Interface Chokes for LAN & Telecom Applications

Features

- EMI noise suppression for data and signal line filtering
- Miniature, low cost SMD common mode chokes are designed for pick and place compatability & provide reliable Coplanarity
- High attenuation over a wide frequency range
- Manufactured in an ISO 9001:2015 and ISO 14001:2015 certified Talema facility
- Other inductance values available upon request
- Parts shown below meet all popular footprints
- Fully RoHS & REACH Compliant and meets lead free reflow level J-STD-020F

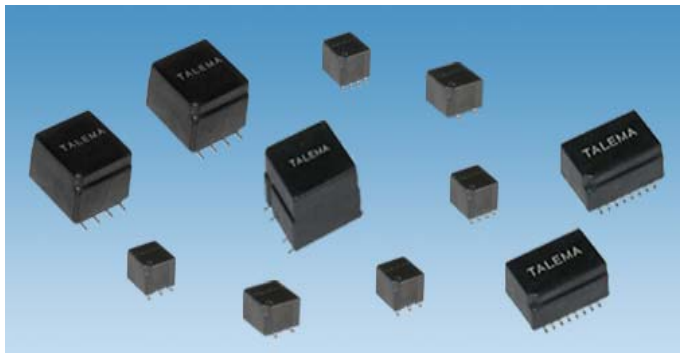

Electrical Specifications @ 25°C

Nominal Voltage: 42Vac (50/60Hz), 80Vdc
Operating temperature: -25° to +85°C
Storage temperature: -40° to +125°C
Climatic category: according to IEC68-1 25/85/56

Test voltage between windings: 500Vrms
Test frequency: Inductance measured @ 100KHz/20mV

Miniature Common Mode Chokes for Data and Signal Line EMI suppression

Part Number	OCL (µH) ±30%	I_N (mA)	DCR (mOhms)	Number of Coils	Windings per Coil	Schematic
Sector winding for CAN bus and similarapplications						
CTJ-2-110SE	11	250	160	1	2	A
CTJ-2-220SE	22	250	195	1	2	A
CTJ-2-330SE	33	200	260	1	2	A
CTJ-2-510SE	51	200	300	1	2	A
CLJ/CMJ-2-060S	6	2500	80	1	2	A
CLJ/CMJ-2-250S	25	800	110	1	2	A
CLJ/CMJ-2-510S	51	800	160	1	2	A
Two Data Lines						
CTJ-2-110	11	300	160	1	2	A
CTJ-2-101	100	300	180	1	2	A
CTJ-2-221	220	200	250	1	2	A
CTJ-2-471	470	200	380	1	2	A
CTJ-2-102	1000	150	660	1	2	A
CTJ-2-222	2200	150	840	1	2	A
CTJ-2-332	3300	150	1500	1	2	A
CTJ-2-472	4700	150	1800	1	2	A
CLJ/CMJ-2-050	5	1200	60	1	2	A
CLJ/CMJ-2-110	11	500	80	1	2	A
CLJ/CMJ-2-240	24	500	100	1	2	A
CLJ/CMJ-2-250	25	500	110	1	2	A
CLJ/CMJ-2-470	47	500	130	1	2	A
CLJ/CMJ-2-510	51	500	148	1	2	A
CLJ/CMJ-2-101	100	500	315	1	2	A
CLJ/CMJ-2-471	470	500	290	1	2	A
CLJ/CMJ-2-102	1000	500	275	1	2	A
CLJ/CMJ-2-222	2200	400	345	1	2	A
CLJ/CMJ-2-472	4700	200	940	1	2	A
CLJ/CMJ-2-103	10000	200	1400	1	2	A
CLJ/CMJ-2-203	20000	140	1800	1	2	A
CLJ/CMJ-2-473	47000	100	3900	1	2	A

Part Number	OCL (µH) ±30%	I_N (mA)	DCR (mOhms)	Number of Coils	Windings per Coil	Schematic
Two Data Lines						
CCJ-2-260	26	900	55	1	2	A
CCJ-2-102	1000	550	140	1	2	A
CCJ-2-152	1500	550	100	1	2	A
CCJ-2-222	2200	550	115	1	2	A
CCJ-2-332	3300	550	140	1	2	A
CCJ-2-502	5000	500	180	1	2	A
CCJ-2-682	6800	450	300	1	2	A
CCJ-2-103	10000	400	250	1	2	A
CCJ-2-123	12000	400	270	1	2	A
CCJ-2-283	28000	270	520	1	2	A
CCJ-2-503	50000	200	970	1	2	A
CCJ-2-703	70000	170	1490	1	2	A
CDJ-1.0-A	1000	600	190	1	2	A
CDJ-1.7-A	1700	550	200	1	2	A
CDJ-2.2-A	2200	350	300	1	2	A
CDJ-3.3-A	3300	350	370	1	2	A
CDJ-4.7-A	4700	350	600	1	2	A
CDJ-6.8-A	6800	350	510	1	2	A
CDJ-10-A	10000	350	620	1	2	A
CDJ-12-A	12000	300	680	1	2	A
CDJ-15-A	15000	300	720	1	2	A
CDJ-22-A	22000	300	920	1	2	A
CDJ-28-A	28000	300	1020	1	2	A
CDJ-33-A	33000	300	1120	1	2	A
CDJ-50-A	50000	300	1800	1	2	A
CDJ-70-A	70000	300	2100	1	2	A

Miniature Common Mode Chokes for Data and Signal Line EMI suppression

Part Number	OCL (µH) ±30%	I_N (mA)	DCR (mOhms)	Number of Coils	Windings per Coil	Schematic
Four Data Lines						
CCJ-4-260	26	600	55	1	4	B
CCJ-4-470	47	500	100	1	4	B
CCJ-4-101	100	400	130	1	4	B
CCJ-4-221	220	400	190	1	4	B
CCJ-4-471	470	400	130	1	4	B
CCJ-4-681	680	400	140	1	4	B
CCJ-4-102	1000	350	190	1	4	B
CCJ-4-152	1500	350	120	1	4	B
CCJ-4-222	2200	350	140	1	4	B
CCJ-4-332	3300	350	180	1	4	B
CCJ-4-502	5000	330	230	1	4	B
CCJ-4-103	10000	230	430	1	4	B
CCJ-4-123	12000	170	790	1	4	B
CCJ-4-583	58000	90	2350	1	4	B
CQJ-1.0-B	1000	400	200	1	4	B
CQJ-1.7-B	1700	350	260	1	4	B
CQJ-2.2-B	2200	300	310	1	4	B
CQJ-3.3-B	3300	300	380	1	4	B
CQJ-5.0-B	5000	300	430	1	4	B
CQJ-6.8-B	6800	300	850	1	4	B
CQJ-10-B	10000	300	1060	1	4	B
CQJ-12-B	12000	250	1120	1	4	B
CQJ-58-B	58000	200	2400	1	4	B
CQJ-90-B	90000	150	4150	1	4	B
CUJ-240-16E	24	800	45	2	2	E
CUJ-340-16E	34	700	55	2	2	E
CUJ-101-16E	100	450	135	2	2	E
CUJ-471-16E	470	450	95	2	2	E
CUJ-102-16E	1000	450	135	2	2	E
CUJ-472-16E	4700	300	310	2	2	E

Part Number	OCL (µH) ±30%	I_N (mA)	DCR (mOhms)	Number of Coils	Windings per Coil	Schematic
Six Data Lines						
CUJ-240-16C	24	650	45	2	3	C
CUJ-470-16C	47	450	90	2	3	C
CUJ-101-16C	100	350	170	2	3	C
CUJ-471-16C	470	350	95	2	3	C
CUJ-102-16C	1000	330	170	2	3	C
CUJ-472-16C	4700	200	430	2	3	C
CUJ-240-16D	24	600	75	3	2	D
CUJ-340-16D	47	500	110	3	2	D
CUJ-101-16D	100	450	135	3	2	D
CUJ-471-16D	470	350	220	3	2	D
CUJ-102-16D	1000	350	220	3	2	D
CUJ-472-16D	4700	190	750	3	2	D
Eight Data Lines						
CUJ-240-16A	24	550	45	2	4	A
CUJ-340-16A	47	400	90	2	4	A
CUJ-101-16A	100	250	240	2	4	A
CUJ-471-16A	470	250	95	2	4	A
CUJ-102-16A	1000	250	240	2	4	A
CUJ-472-16A	4700	160	600	2	4	A
CUJ-240-16B	24	430	130	4	2	B
CUJ-340-16B	47	160	180	4	2	B
CUJ-101-16B	100	300	260	4	2	B
CUJ-471-16B	470	300	180	4	2	B
CUJ-102-16B	1000	300	240	4	2	B
CUJ-472-16B	4700	160	1180	4	2	B

Mechanical Dimensions

Dimensions: Inches (Millimeters);
Tolerance: ±0.010 (0.25) unless specified otherwise;
Surface Coplanarity will be 0.004 (0.10) maximum

CTJ-2

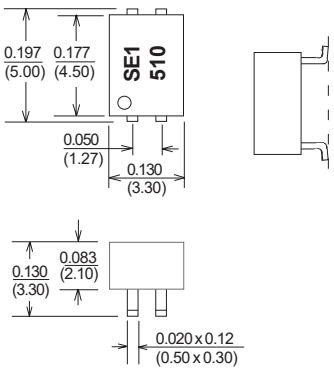

Suggested Pad Layout

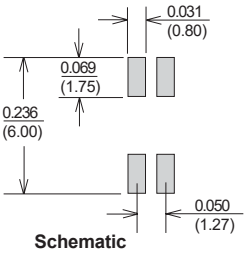

Schematic

A

CCJ-2 / 4

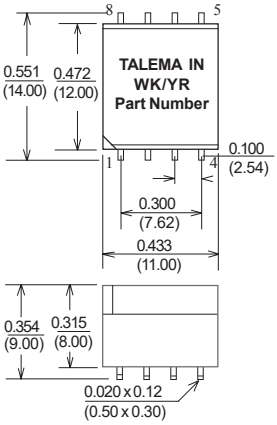

Suggested Pad Layout

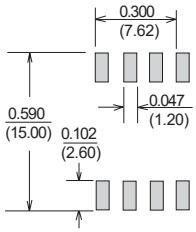

A

B

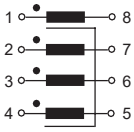

CLJ/CMJ-2

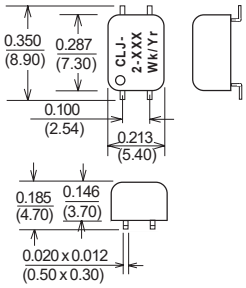

Suggested Pad Layout

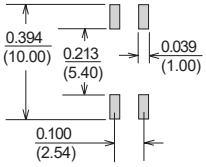

Schematic

A

1	8
2	7
3	6
4	5

CLJ/CMJ-4

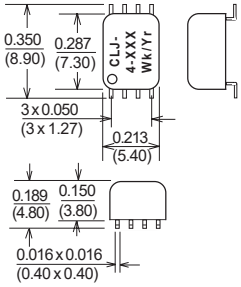

Suggested Pad Layout

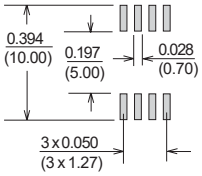

Schematic

A

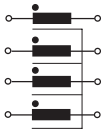

CUJ-XXX-16

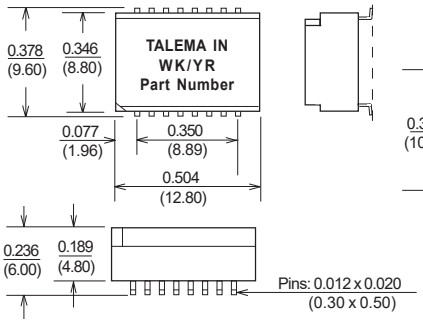

Suggested Pad Layoout

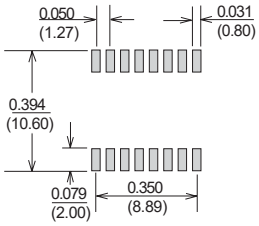

Schematics

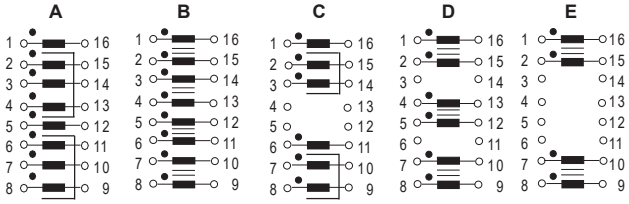

Carrier Tape - 1

Carrier Tape Dimensions (12.00mm, 16.00mm & 24.00mm)

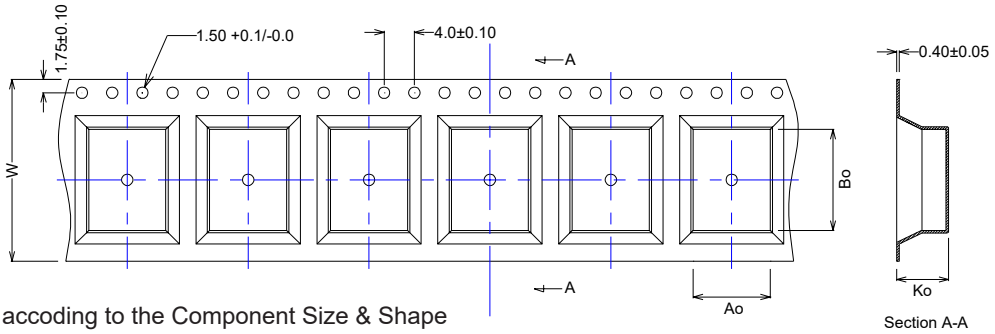

Ao, Bo & Ko - Vary accoding to the Component Size & Shape

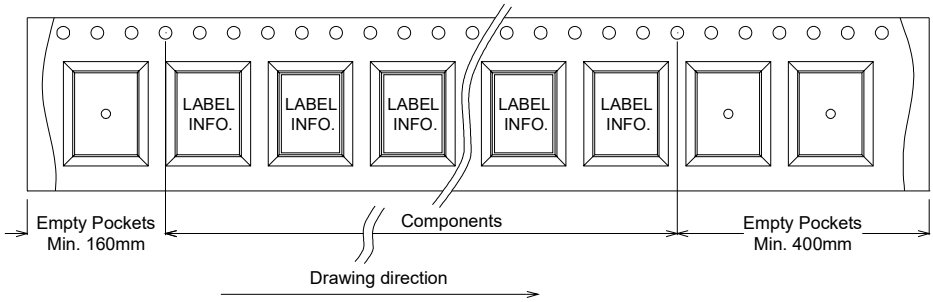

Carrier Tape - 2

Carrier Tape Dimensions (32.00mm & 44.00mm)

Carrier Tape Dimensions in mm	
Width	Pitch Co
32.00	28.50
44.00	40.50

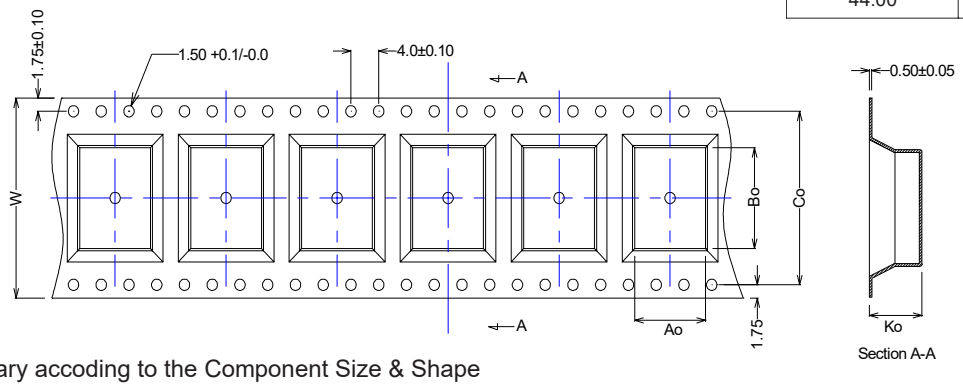

Ao, Bo, Co & Ko - Vary accoding to the Component Size & Shape

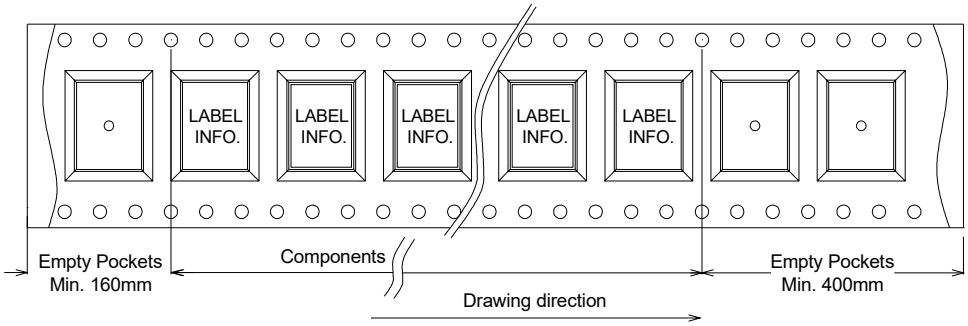

Tape & Reel Packaging and Dimensions

Reel Drawing

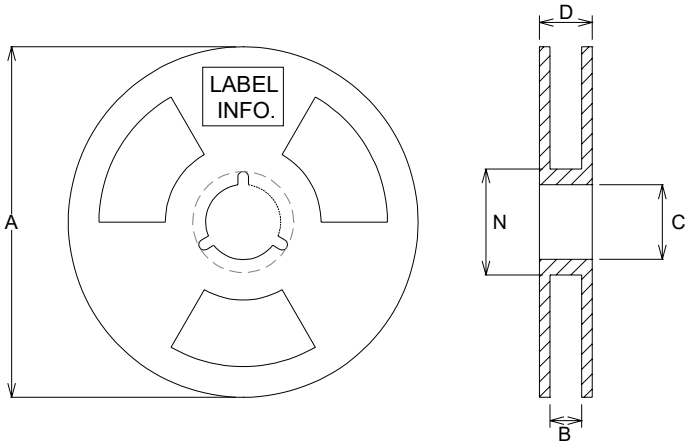

Reel Dimensions in "mm"					
Type	A	B	C	D	N
13.00mm	Ø330	13	Ø20.2	17	Ø100
16.00mm	Ø330	16	Ø20.2	20	Ø100
24.00mm	Ø330	24	Ø20.2	28	Ø100
32.00mm	Ø330	32	Ø20.2	36	Ø100
44.00mm	Ø330	44	Ø20.2	48	Ø100

Tape and Reel Dimensions				
Name of the Series	Reel Type	No. of inside Carton	Quantity (Pcs/Reel)	Quantity (Reel/Cased)
CTJ-2	13.00mm	5	2000	5/2000
CLJ/CMJ-2	16.00mm	5	1000	5/1000
CLJ/CMJ-4	16.00mm	5	1000	5/1000
CCJ	24.00mm	5	375	5/375
CUJ	24.00mm	5	600	5/600
CDJ	32.00mm	5	200	5/200

Inside Carton

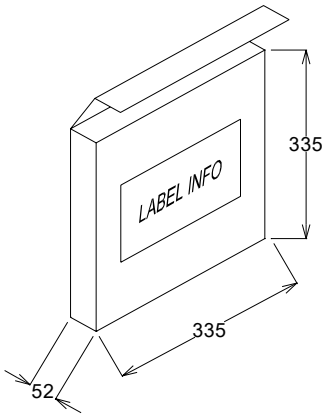

Outer Carton

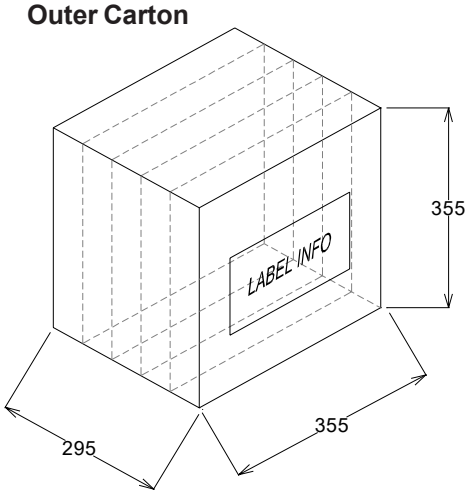

talemagroup

Regional Locations - Design, Manufacturing, Sales & Marketing

Talema Group Regional Offices

North America

United States
(Sales & Marketing)

Talema Group, LLC
PO Box 935
900 Innovation Drive
Suite 120, Rolla
Missouri 65402
Tel: +1 573-303-3675
E-Mail:
sales@talemagroup.com
Web: www.talema.com

Asia

India
(Design, Manufacturing, Sales & Marketing)

Administrative Office
Talema Electronic India Private Limited
Door No. 221, 1st and 2nd Floor
KJ Plaza, Opp.to Vidya Mandir School
Meyanoor Main Road
Salem - 636 004 Tamil Nadu INDIA
Tel: +91 427 - 243 3100
Fax: +91 427 - 243 3109
E-Mail: talema@talemaindia.net
Web: www.talema.com

Factory Premises
Talema Electronic India Private Limited
Plot Nos. 30, 31 Electrical and Electronic
Industrial Estate
Suramangalam
Salem - 636 005 Tamil Nadu INDIA
Tel: +91 427 - 243 3000
E-Mail: talema@talemaindia.net
Web: www.talema.com

Europe

Germany
(Design, Sales & Marketing)

Talema Elektronik GmbH
Sembdnerstr. 5
82110 Germering
Tel: +49 89 - 841 00 - 0
Fax: +49 89 - 841 00 25
E-Mail: info@talema.de
Web: www.talema.com

Ireland
(Design, Sales & Marketing)

Nuvotem TEO
Units W & X, Gweedore Business Park
Derrybeg, Letterkenny, Co. Donegal
Tel: +353 (0) 74 95 48666
Fax: +353 (0) 74 95 48139
E-Mail: info@nuvotem.com
Web: www.nuvotem.com

Czech Republic
(Design, Manufacturing, Sales & Marketing)

NT Magnetics s.r.o.
Chebská 27
322 00 Plzeň
Tel: +420 377 - 338 351
Fax: +420 377 - 338 350
E-Mail: talema@talema.cz
Web: www.ntmagnetics.cz

Locations of Talema Group Regional Offices

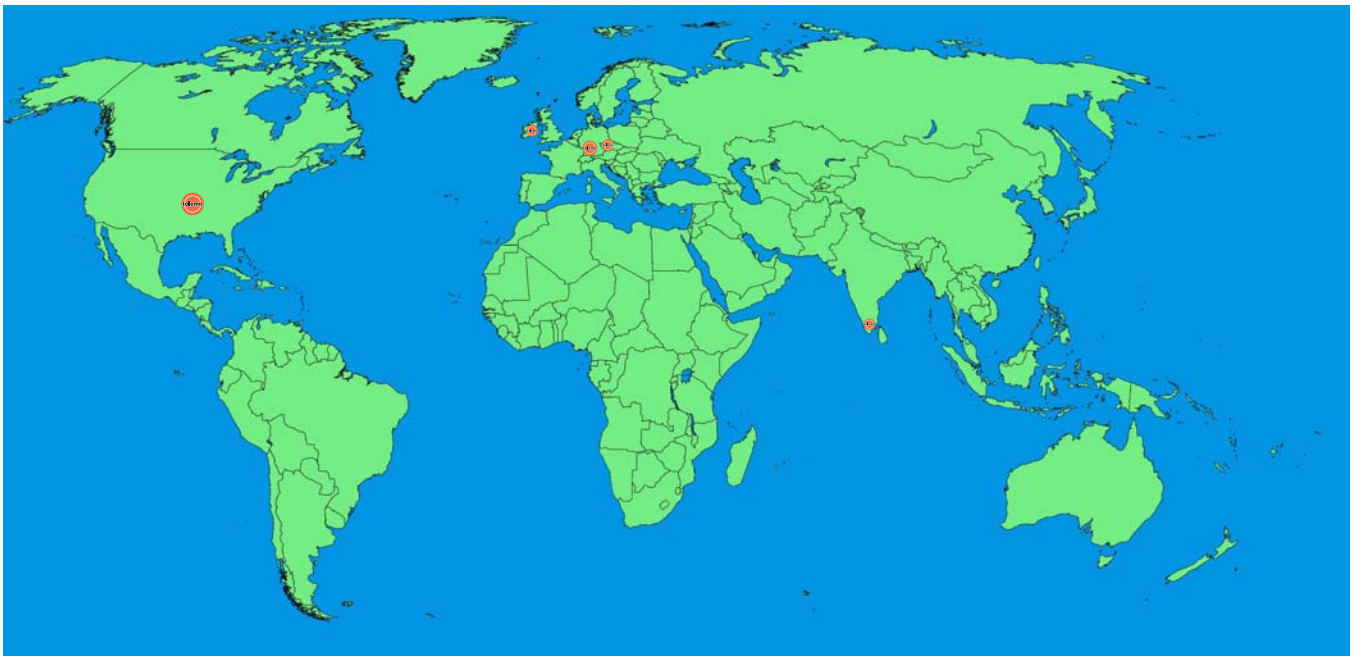

talemagroup

Summary
TOTAL PROGRAM

SECTION1
- Toroidal 50/60Hz Transformers, Toroidal PCB Transformers & Medical Grade Isolation Transformers

SECTION 2
- Current Sense Transformers & Inductors

SECTION 3
- Chokes, Inductors and Transformers for Power Applications

SECTION 4
- Transformers & Inductors for SMPS Magnetics Requirements

SECTION 5
- Components for Telecommunications and Data Line Technology

SECTION 6
- Current Compensated EMI Noise Suppression Chokes

SECTION 7
- LAN Magnetic Components for Ethernet Applications

SECTION 8
- T1/E1/CEPT-Pri - T3/DS3/E3/STS-1 for Telecommunication Products

SECTION 9
- Transformers for Broadband Access and Fibre Channel Interface

SECTION 10
- The Talema Group Brochure Overall Products - An Overview

RoHS REACH

10/23